AT-401

Adapter for Axis Mount Bracket

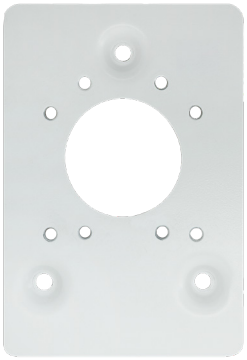

Recessed Adapter

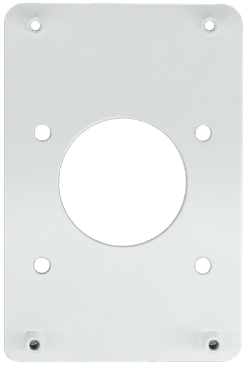

Small Adapter

Technical Specifications

Model	AT-401
Construction	SPCC
Dimensions	Recessed : 195 x 135 x 13 mm Small : 180 x 120 x18 mm
AXIS Wall Mount	T91E61 : Recessed Adapter T91D61 : Recessed Adapter + Small Adapter
Color	White
Weight	Recessed Adapter : 0.54kg Small Adapter : 0.44kg
Supported Models	Outdoor PoE Switch : H60-022-90-120-B H40-022-91-120-B

Unit: mm

Recessed Adapter

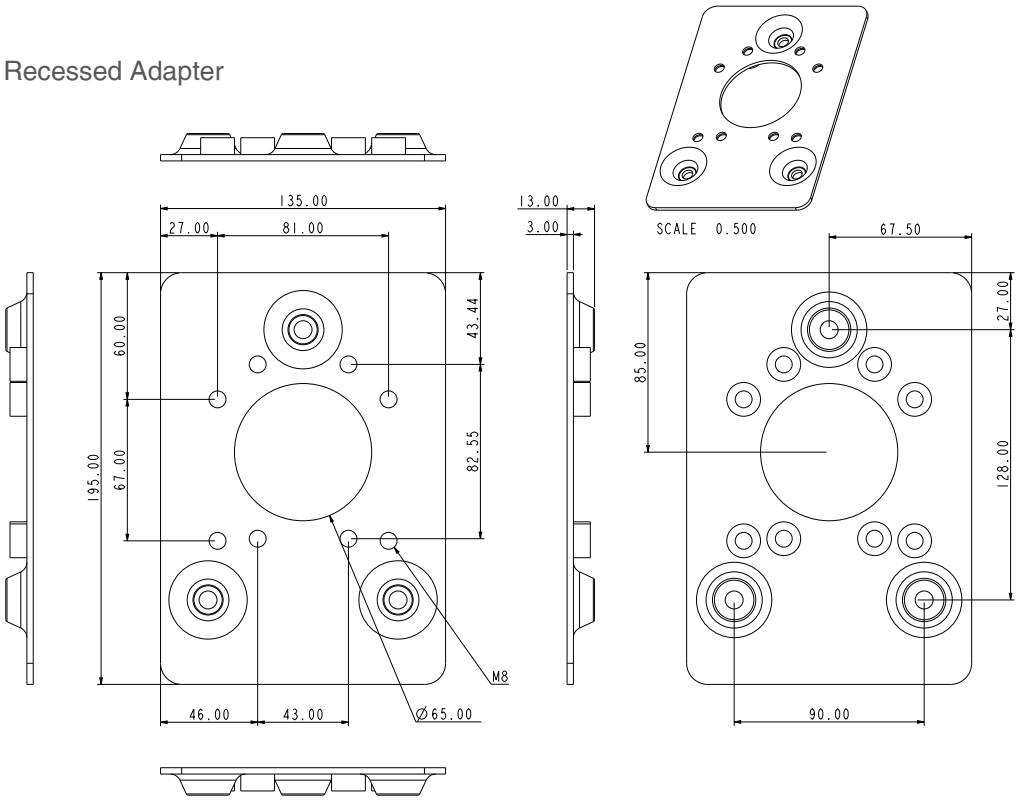

Technical Specifications

Model	AT-401

Unit: mm

Small Adapter

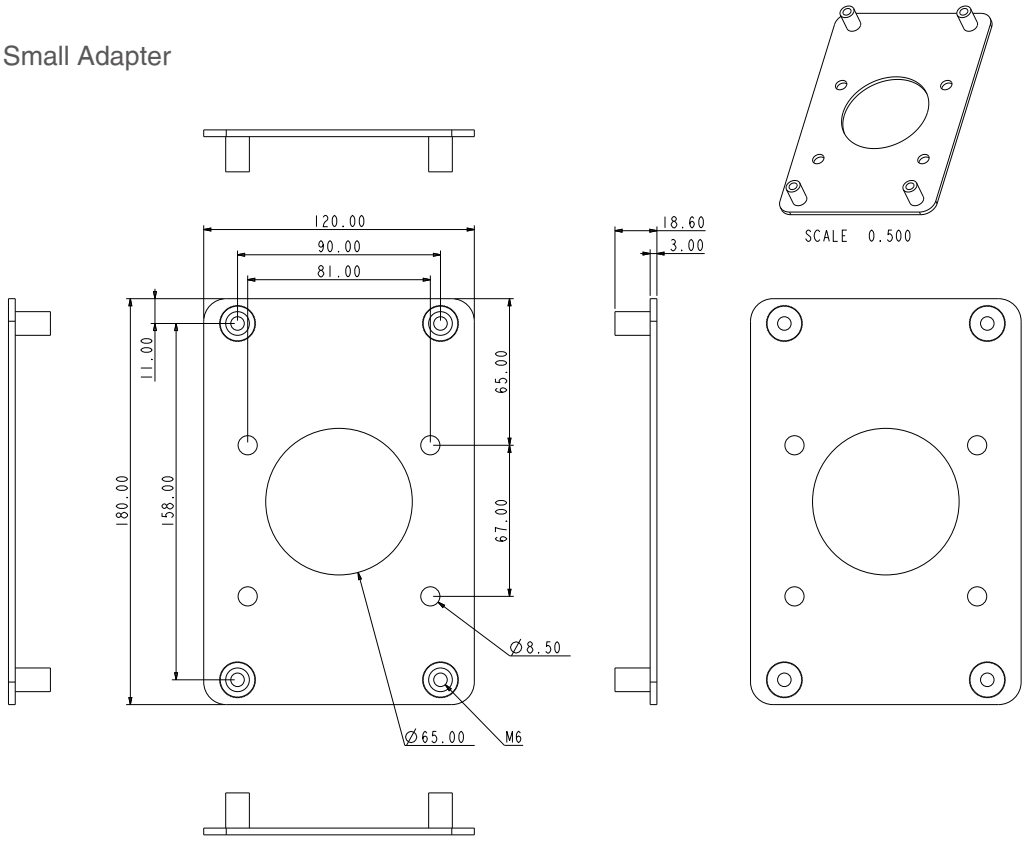

All specifications are subject to change without notice. Copyright © AETEK INC. All rights reserved.
6F, No.192-1, Lien-Cheng Rd., Chung-Ho, New Taipei City, 235, Taiwan, R.O.C. T: +886-2-82452822 F: +886-2-82455532 E:sales@aetektec.com W: www.aetektec.com