AT-402

Adapter for Hanwha Mount Bracket

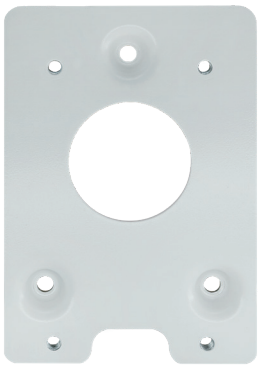

Technical Specifications

Model	AT-402
Construction	SPCC
Dimensions	195 x 135 x 13 mm
Hanwha Wall Mount	SBP-300WM1 SBP-300WMW1
Color	White
Weight	0.51kg
Supported Models	Outdoor PoE Switch : H60-022-90-120-B H40-022-91-120-B

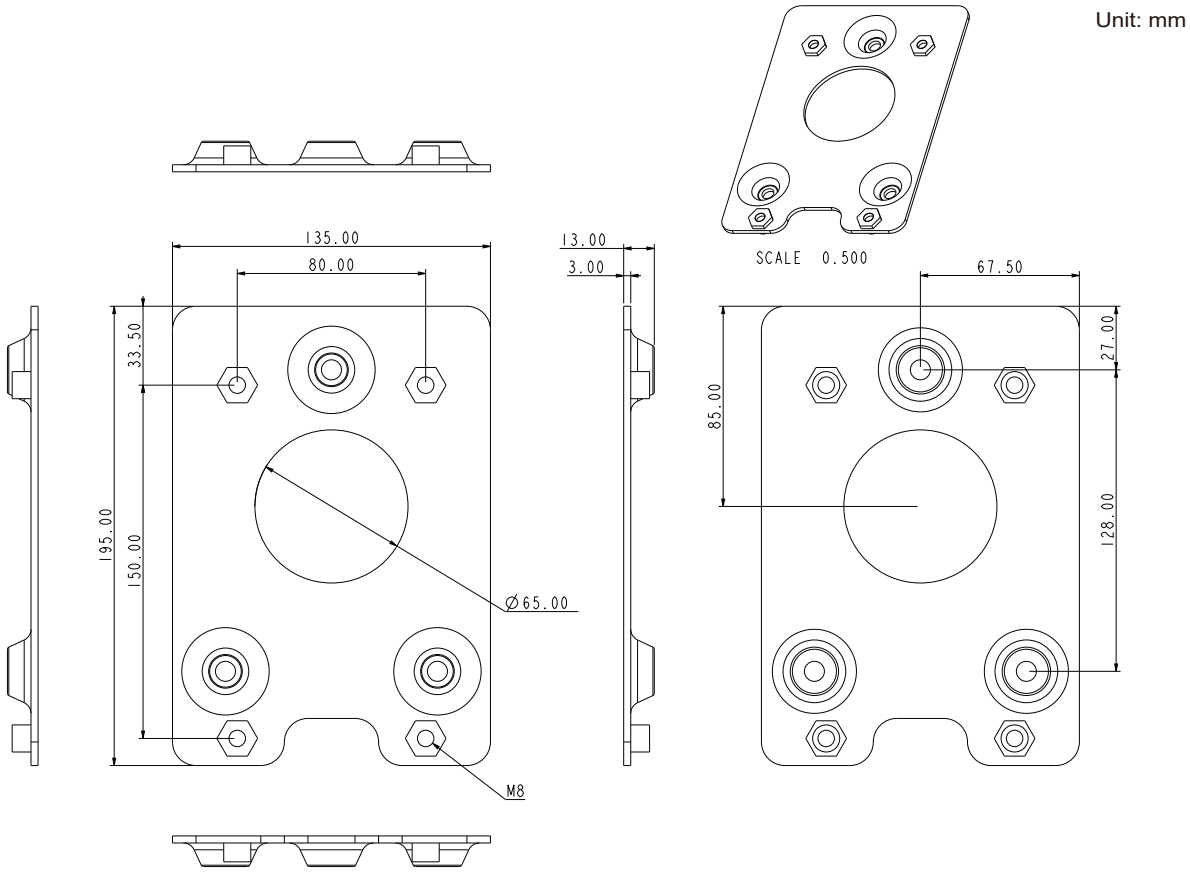

AETEK INC.
All specifications are subject to change without notice. Copyright © AETEK INC. All rights reserved.
6F, No.192-1, Lien-Cheng Rd., Chung-Ho, New Taipei City, 235, Taiwan, R.O.C. T: +886-2-82452822 F: +886-2-82455532 E:sales@aetektec.com W: www.aetektec.com