AETEK
A Delta Group Company

PoE Engineered for
Surveillance and Security

L49-120-U

Industrial Uninterruptible Low Voltage PoE Hub with Battery Backup



TAA & NDAA COMPLIANT
DESIGNED AND MADE IN TAIWAN

12/24 V battery
Power backup

48-56 V DC & bt PoE
Power input options

90 W PoE++
af/at/bt PSE

2 × 12/24 V DC
Outputs, 3 A each

2 × alarm DO
Input loss, battery fail

−30 to 75 °C
Operating range

Power & Battery Backup

- 48–56 V DC and IEEE 802.3bt PoE input
- 12 or 24 V lead-acid or LiFePO4 battery backup
- Seamless switchover when input power fails

PoE & DC Outputs

- 1 × PoE++ output up to 90 W (af/at/bt)
- 2 × 12 or 24 V DC outputs, up to 3 A each
- PoE and DC loads share the output budget

Alarm Supervision

- Alarm outputs for input loss and battery fault
- NTC sensor monitors battery temperature

Connectivity & Industrial Design

- PoE input port also works as a LAN data port
- −30 to 75 °C, fanless, DIN-rail or wall mount

Typical Applications

01 Intercom communication with backup power

The L49-120-U powers IP intercoms, access control and IP cameras over PoE, and door locks and other 12 or 24 V devices from its DC outputs. If input power fails, the battery takes over.

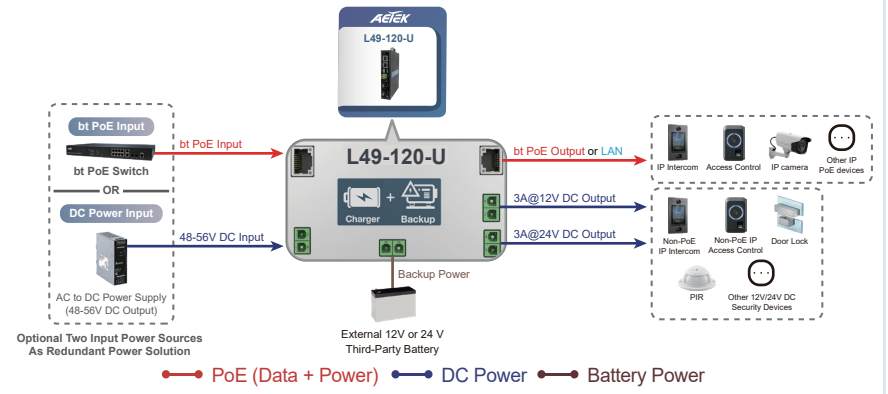

02 Battery backup for media converter

The L49-120-U powers a third-party media converter, a strobe and a PoE device. The PoE input port works as a LAN uplink to the media converter. The battery keeps everything on during an outage.

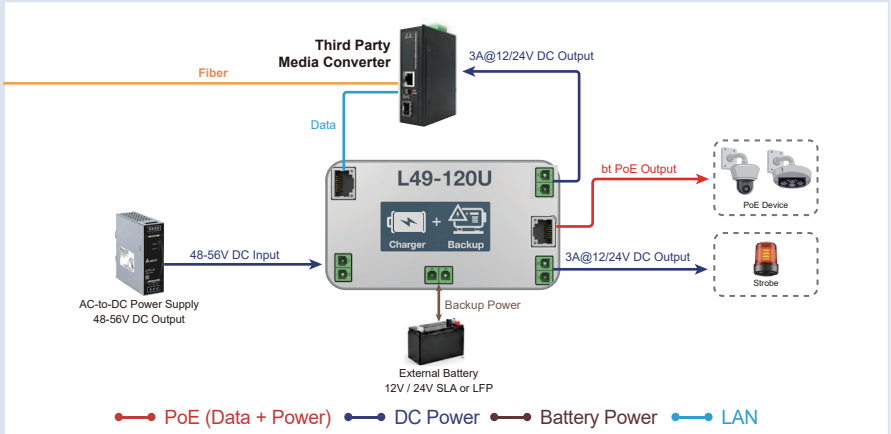

AETEK

Interfaces



Battery Temperature Sensor
Monitors battery temperature to ensure safe charging and power delivery

Digital Outputs
Provides alerts for bt PoE or DC input power faults, low battery voltage and battery faults

DC Power Input
48~56V DC input for higher power demands

bt PoE Power Input
Single Ethernet cable provides 802.3bt PoE power and network connectivity

2 DC Outputs
Selectable 3A@12V or 3A@ 24V DC outputs for PIRs and other security devices

Backup Battery Connection
Connect a 12V or 24V battery for backup power

PoE Power Output
Provides 802.3af/at/bt PoE power and network connectivity for IP devices

Dimensions

Unit: mm

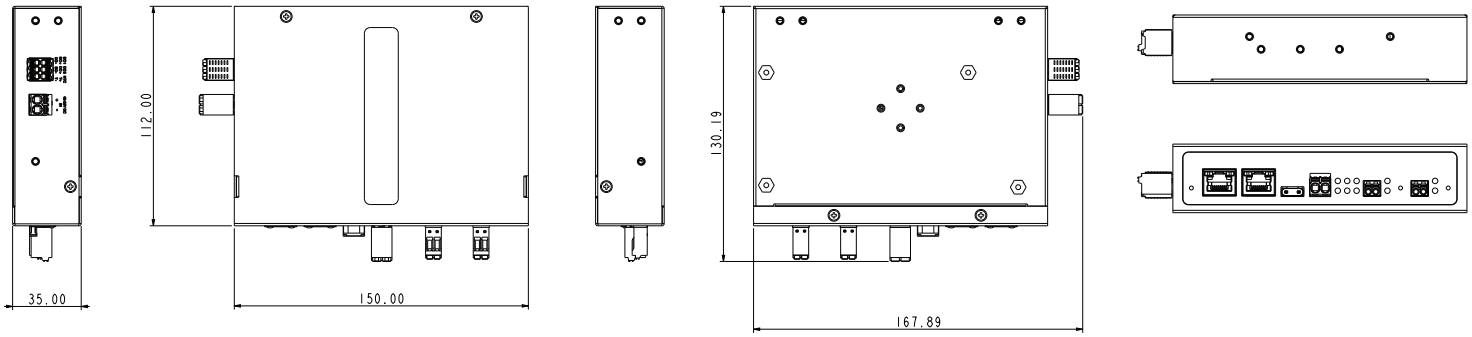

Hardware Specifications

Interfaces	
Total Gigabit ports	2
PoE input	1 × 10/100/1000 Mbps RJ45, IEEE 802.3bt PD (Class 8) Also works as a LAN data port
PoE output	1 × 10/100/1000 Mbps RJ45, IEEE 802.3af/at/bt
DC output	2 × 12 or 24 V DC, terminal block
Other ports	2 × DO; NTC input
Power	
Power input	48–56 V DC, IEEE 802.3bt PoE input
PoE output per port	IEEE 802.3af: up to 15.4 W IEEE 802.3at: up to 30 W IEEE 802.3bt: up to 90 W
PoE input pins	1,2 (−); 3,6 (+); 4,5 (+); 7,8 (−) 1,2 (+); 3,6 (−); 4,5 (+); 7,8 (−)
PoE output pins	1,2 (−); 3,6 (+); 4,5 (+); 7,8 (−)
DC output per port	12 or 24 V DC, up to 3 A
Total output budget	See Power budget (page 3)
Standby consumption	2 W
Fuse	58 V / 10 A

Supervision	
Digital output (DO)	2 × 24 V DC
DO1 alarm	Loss of PoE or DC input
DO2 alarm	Battery fail
Mechanical	
Dimensions (W × D × H)	35 × 130 × 168 mm (1.4 × 5.1 × 6.6 in)
Weight	0.5 kg (1.1 lb)
Cooling fan	Fanless
Mounting options	DIN-rail or wall mount
Environment	
IP rating	IP30
Operating temperature	−30 to 75 °C (−22 to 167 °F)
Cold start	−20 °C (−4 °F)
Storage temperature	−40 to 85 °C (−40 to 185 °F)
Operating humidity	5% to 95%, non-condensing
MTBF	Over 50,000 hours
Approvals	
EMC	CE, FCC, VCCI, C-Tick

Battery Variants

Select the model for the intended battery chemistry. External batteries are not included.

	L49-120-U-LA	L49-120-U-LI
Battery Type	Lead-acid	LiFePO4
Battery Capacity	12 V / 18 Ah 24 V / 9 Ah	12 V / 20 Ah 24 V / 9 Ah
Battery Charge Power	24 W at DC input, 12 W at bt PoE input	24 W at DC input, 12 W at bt PoE input
Float Charge Voltage	12 V battery: 13.6 V 24 V battery: 27.2 V	–
Absorption Charge Voltage	12 V battery: 14.6 V 24 V battery: 29.2 V	12 V battery: 14.6 V 24 V battery: 29.2 V
Low-voltage Disconnection	12 V battery: 10.6 V 24 V battery: 21.2 V	12 V battery: 11.2 V 24 V battery: 22.4 V
Deep Discharge Protection	12 V battery: warning 10.6 V, disconnection 10.0 V (9.8 V min. at load) 24 V battery: warning 21.6 V, disconnection 20.0 V (19.6 V min. at load)	

Power Budget and Backup Runtime

Available output depends on input source, battery voltage and operating temperature. Plan the combined loads within the applicable shared budget.

Power Budget

Input source	Ambient	12 V battery discharge	24 V battery discharge	12 V battery charge	24 V battery charge
48–56 V DC input	75 °C	60 W	130 W	60 W	130 W
48–56 V DC input	60 °C	72 W	172 W	72 W	172 W
bt PoE input	75 °C	45 W	45 W	45 W	45 W
bt PoE input	60 °C	60 W	60 W	60 W	60 W

Backup Duration by Load and Battery Configuration

			Power Consumption			
Charging Watts	**Battery**	**Charge time LA (10% - 80%, 80% - 100%) LFP(10% - 90%, 90% - 100%)**	**15W**	**30W**	**60W**	**90W**
12 V / 2 A 24 V / 1 A 24 W	12 V / 7 Ah lead-acid	4 hr 16 mn / 6 hr 58 mn	1 hr 33 mn	1 hr 00 mn	34 mn	23 mn
	24 V / 7 Ah lead-acid	8 hr 32 mn / 13 hr 56 mn	3 hr 34 mn	2 hr 19 mn	1 hr 19 mn	54 mn
	12 V / 7 Ah LiFePO4	4 hr 24 mn / 5 hr 46 mn	2 hr 26 mn	1 hr 40 mn	1 hr 02 mn	43 mn
	24 V / 7 Ah LiFePO4	8 hr 48 mn / 11 hr 32 mn	5 hr 02 mn	3 hr 27 mn	2 hr 06 mn	1 hr 30 mn

Optional Accessories



DRL-48V120W1EN
DIN-rail power supply, 48 V / 120 W



DRL-48V240W1EN
DIN-rail power supply, 48 V / 240 W



DRL-48V240W1EN-AC-SOCKET
DIN-rail power supply with AC power socket, 48 V / 240 W



DRL-48V480W1EN
DIN-rail power supply, 48 V / 480 W



DRL-48V480W1EN-AC-SOCKET
DIN-rail power supply with AC power socket, 48 V / 480 W

Related Products

C42-084-91-770
Indoor switch, 8 × 90 W bt PoE, 2 × RJ45, 2 × SFP; 100–240 V AC input

C42-042-91-380
Indoor switch, 4 × 90 W bt PoE, 2 × RJ45; 100–240 V AC input



D42-042-91
DIN-rail industrial switch, 2 × 90 W bt PoE, 2 × passive PoE, 2 × SFP; 12/24 V DC out; 52–56 V DC input



D40-044-91
DIN-rail industrial switch, 4 × 90 W bt PoE, 2 × RJ45, 2 × SFP; 48–56 V DC input



D40-044-91-DC
DIN-rail industrial switch, 4 × 90 W bt PoE, 2 × RJ45, 2 × SFP; 12–48 V DC input

Specifications are subject to change without notice. All trademarks, service marks, and logos used herein are the property of their respective owners.
© 2026 AETEK INC. All rights reserved.